XTREME SERIES - TOP MOUNT CONTROL

APPLICATIONS

Dual-function control - one lever controls throttle and shift. For nearly any engine

FEATURES

- All controls include start in gear protection
- Designed for use with both 3300/33C universal and OEM shift and throttle cable connections
- Suitable for most single engine/single station combinations
- Can be used in dual station boats with the DS unit
- Optional neutral interlock available
- Trim & Tilt options available
- Drag adjustment on all models
- Easy installation and set up
- Neutral “warm up” button for throttle only operation
- Designed and assembled in the USA

CHX8141P Pictured

The ergonomics and features of our Xtreme controls are advanced beyond those of any other control on the market.

A shapely, balanced handle design provides an incredibly smooth yet positive feel. Neutral throttle warm-up, start-in-gear protection features are standard on all Xtreme models, with neutral interlock and power trim/tilt offered as an option. In addition the cosmetics of these controls can be configured to many tastes.

Xtreme controls are suitable for use with both 3300/33C universal or OEM type control cables without the need for additional adaptors.

The handle is on the left side of the bezel.

ORDER INFORMATION

OPTION - BLACK	PART No.
Single Top-Mount Control - Lever on the Left	
Xtreme Single Top Mount Control, Black, Trim Switch (no Neutral Interlock on Handle)	CHX8641P

OPTION - CHROME	PART No.
Xtreme Single Top Mount Control, Chrome with Neutral Interlock on Handle, Trim Switch	CHX8151P
Xtreme Single Top Mount Control, Chrome with Neutral Interlock on Handle, Trim Switch, Tilt Switch	CHX8152P

NOTE:
When properly installed, these engine controls will connect to outboard, stern drive and inboard engines, utilizing Mercury/Mariner® and OMC® OEM type control cables as well as 3300/33C universal type cables and engine connection kits.

Issue Date - Sept 2017
Issue Number - mcda-4 aftermarket

XTREME SERIES - TOP MOUNT CONTROL

TECHNICAL DATA

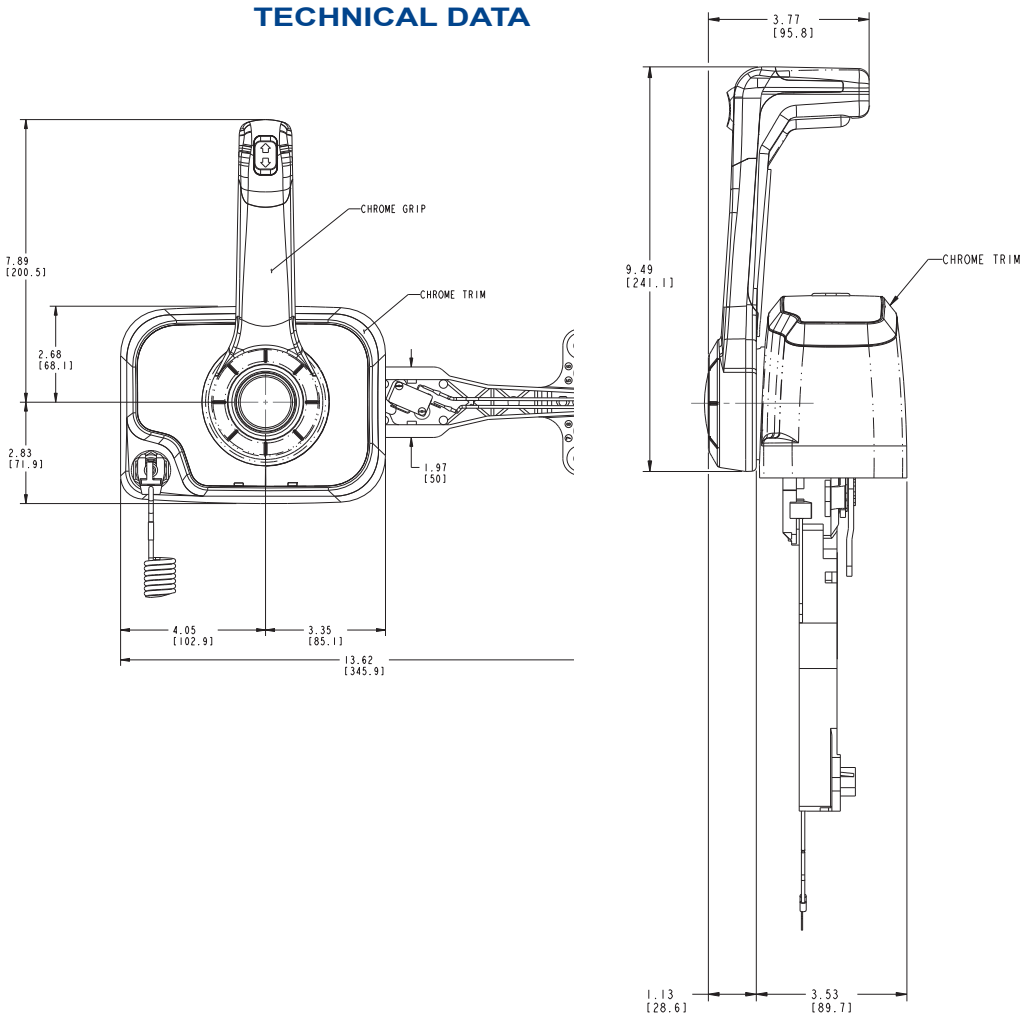

CH7500 Hole Cutout

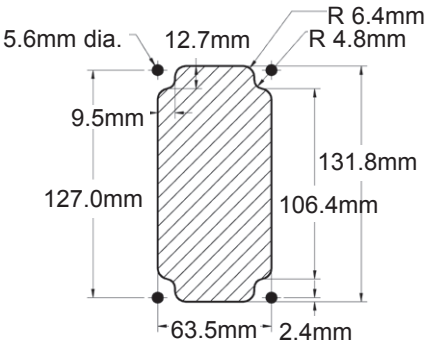

Issue Date - July 2017
Issue Number - mcda-4 aftermarket